2020

GO Technologies HEPAD

Installation and Operation Manual

Blank Page

HEPAD – High Efficiency Portable Aeration Dryer

WARNING
If the information in this manual is not followed exactly, a fire or explosion may result causing property damage, personal injury or loss of life.

WARNING
Do not store or use gasoline or other flammable vapors and liquids in the vicinity of this or any other appliance.

WARNING
If you smell gas: **1. Do not try to light any appliance** **2. Don't touch electrical switches** **3. Extinguish any open flame** **4. Immediately call your gas supplier. Follow the gas supplier's instructions** **5. If you can't reach your gas supplier, call the fire department**

WARNING
Installation and service must be performed by a qualified installer, service agency or the gas supplier.

WARNING
Improper installation, adjustment, alteration, service or maintenance can cause injury, death or property damage. Read the installation, operation and service instructions thoroughly before installing or servicing this equipment.

FOR YOUR SAFETY
The use and storage of gasoline and other flammable vapors and liquids in open containers in the vicinity of this appliance is hazardous.

CAUTION: FIRE OR EXPLOSION HAZARD
Maintain clearance to combustible constructions as further specified in this manual. Failure to do so could result in a serious fire hazard. Heaters should not be located in hazardous atmospheres containing flammable vapors or combustible dusts.

CAUTION: FIRE OR EXPLOSION HAZARD
This unit is equipped with an automatic ignition device. Do not attempt to light the burner by hand. Failure to comply could result in a serious fire and personal injury hazard.

CAUTION: MECHANICAL HAZARD
Do not use high pressure (above 1/2 psi) to test the gas supply system with the burners connected. Failure to do so could result in damage to the burner and its control components requiring replacement.

Owner

Retain this Manual for reference.

Table of Contents

Chapter 1: Safety 1
1.1 Safety Guidelines 1
1.2 Personal Protective Equipment: 1
1.3 Safety Instructions 1
1.4 Maintain Equipment and Work Area 2
1.5 Handle and Use Equipment Properly 2
1.6 Keep Hands Away from Moving Parts 2
1.7 Preventing Bin Damage 3
1.8 Install and Operate Gas-Fired Equipment Properly 3
1.9 For Your Safety 3
1.10 Install and Operate Electrical Equipment Properly 4
1.11 Decals 4

Chapter 2: Introduction 6
2.1 Shipping Parts List 6
2.2 Location of Controls 7

Chapter 3: Installation and Setup 9
3.1 HEPAD Placement 9
3.2 Connect Bin Socks and Ducting 9
3.3 Y-Adapter 10
3.4 Air Flow Gauge 10
3.5 Electrical Connections 10
3.6 Changing Motor Size and adjusting Input Voltage 10
3.7 Grounding 11
3.8 Natural Gas Connections 11
3.9 Propane Connections 11

Chapter 4: Operation 13
4.1 Pre-Start 13
4.2 Startup Procedure 13
4.3 Burner Starting Sequence of Operation 13
4.4 Shutdown Procedure 14
4.5 Temperature Controller – Ink Bird Model 14
4.6 Temperature Controller - SOLO Model 16

Chapter 5: Service 17
5.1 General Maintenance 17
5.2 Drain Plug – Annual Check or when put in storage 17
5.3 Burner – Annual Check 17
5.4 Checking for gas leaks – Annual Check 18

5.5 Checking gas valve tightness - Annual Check 18
5.6 Converting between LPG and Natural Gas. 18

Chapter 6: Grain Drying 19
6.1 Maximum allowable air temperatures for grain drying 19
6.2 Maximum Moisture Content Levels for Straight Grade Seed 19
6.3 Recommended Air Flow 20
6.4 Equilibrium Moisture Content (EMC) of Grain 20
6.5 ECM Charts 21

Chapter 7: Troubleshooting 24
7.1 General Issues 24
7.2 Burner Module Error Codes 25

Chapter 8: Specifications 27
8.1 HEPAD Specifications 27
8.2 Fan Electrical Information 27
8.3 Fan Performance 27
8.4 Burner Specifications 27

Chapter 9: Electrical Drawings 28
9.1 Fan Motor Wiring Diagrams 28
9.2 Burner Schematics 30
9.3 Electrical Schematics 31

Chapter 10: P&ID Drawings 32

Chapter 11: Parts List 33
11.1 Burner Replacement Parts 33
11.2 Fan Replacement Parts 5HP – 10HP Fan Motors 34
11.3 Fan Replacement Parts 20HP – 25HP Fan Motors 35
11.4 Dual HEPAD Parts 36

Chapter 12: Notes 37

Chapter 1: Safety

1.1 Safety Guidelines

Safety guidelines are general-to-specific safety rules that must be followed at all times. This manual is written to help you understand safe operating procedures and problems that can be encountered by the operator and other personnel when using this equipment. Save these safety guidelines for future reference. As owner or operator, you are responsible for understanding the requirements, hazards, and precautions that exist and to inform others as required. Unqualified persons must stay out of the work area at all times. Alterations must not be made to the equipment. Alterations can produce dangerous situations resulting in SERIOUS INJURY or DEATH. This equipment must be installed in accordance with the current installation codes and applicable regulations, which must be carefully followed in all cases. Authorities having jurisdiction must be consulted before installations are made. When necessary, you must consider the installation location relative to electrical, fuel and water utilities. Personnel operating or working around equipment must read this manual. This manual must be delivered with equipment to its owner. Failure to read this manual and its safety instructions is a misuse of the equipment.

1.2 Personal Protective Equipment:

- Use appropriate personal protective equipment:
  a. Eye Protection
  b. Hearing Protection
  c. Hand Protection
  d. Head Protection
  e. Respiratory Protection
  f. Foot Protection
  g. Fall Protection
- Wear clothing appropriate to the job.
- Remove all jewelry.
- Tie long hair up and back.

1.3 Safety Instructions

- **Warning:** If the information in the manual is not followed exactly, a fire or explosion can result, causing property damage, personal injury or loss of life.
- Carefully read all safety messages in this manual and safety signs on your machine. Keep signs in good condition. Replace missing or damaged safety signs. Be sure new equipment components and repair parts include the current safety signs.
- Learn how to operate the machine and how to use controls properly. Do not let anyone operate without instruction.

- If you do not understand any part of this manual or need assistance, contact your dealer.
- Retain these instructions for future reference

1.4 Maintain Equipment and Work Area

- Understand service procedures before doing work.
- Keep area clean and dry.
- Do not service equipment while it is operating. Disconnect and lock-out power and fuel supply before performing maintenance.
- Keep your equipment in proper working condition. Replace worn or broken parts immediately.
- Depressurize the fuel train before disassembling for service.
- Allow the fan to operate for 20 minutes with the burner off to cool the components before working on equipment.
- Check regularly for any developing gas plumbing leaks. Do not operate the dryer if any gas leak is detected. Shut down and repair before further operation.

1.5 Handle and Use Equipment Properly

- Equipment is intended for the use of grain drying only. Any other use is a misuse of this equipment.
- On LP fired units, set pressure regulator to avoid excessive gas pressure applied to the burner during ignition and operation. Do not exceed maximum recommended drying temperatures.
- Equipment has sharp edges that can cause serious injury. To avoid injury, handle sharp edges with caution and use proper protective clothing and equipment at all times.
- All guards must be in place before and during operation.
- Use caution when working around high-speed fans and gas burners which can start automatically.
- Keep hands, feet, and clothing away from moving parts.
- Do not bypass any safety device or interlock.

1.6 Keep Hands Away from Moving Parts

- Do not operate the fan with electrical or mechanical guards removed. Serious injury or death can result.
- Do not put hand or arm in fan. Rotating parts can crush and dismember.
- Do not put any kind of tool inside the fan to clear debris while the fan is operating. Damage to the equipment will result.
- Lock-out power source before making adjustments, cleaning, or maintaining equipment.

1.7 Preventing Bin Damage

- Ensure there is enough venting on the bin roof to minimize condensation.
- Only use the HEPAD in a positive aeration system. Do not use the HEPAD on a bin in a suction or negative pressure aeration system.
- Be sure all roof vents are open and unobstructed before HEPAD is started.
- Do not operate HEPAD when conditions may cause roof vent or intake ports to freeze.

1.8 Install and Operate Gas-Fired Equipment Properly

- Gas-fired equipment should be installed by a qualified pipe fitter and must conform with local codes.
- For Canada: The equipment shall be installed in accordance with the Natural Gas and Propane Installation Code, CSA B149.1, and the Propane Storage and Handling Code, CSA B149.2, or applicable provincial regulations, which should be carefully followed in all cases. Authorities having jurisdiction should be consulted before installations are made.
- For the United States: The equipment shall be installed in accordance with the National Fuel Gas Code ANSI Z223.1/NFPA 54.

1.9 For Your Safety

- If you smell gas:
    a. Do not try to light any appliance.
    b. Extinguish any open flames.
    c. Do not touch any electrical switch.
    d. Shut off main gas valve
    e. Immediately call your gas supplier. Follow the gas supplier's instructions.
    f. If you cannot reach your gas supplier, call the fire department.
- The use and storage of gasoline and other flammable vapors and liquids in open containers in the vicinity of this appliance is hazardous.
- Improper installation, adjustment, alteration, service or maintenance can cause property damage, injury or death. Read the installation, operating and maintenance instructions thoroughly before installing or servicing this equipment. Installation and service must be performed by a qualified installer, service agency or the gas supplier.

1.10 Install and Operate Electrical Equipment Properly

- Electrical controls must be installed by a qualified electrician and must meet the standards set by applicable local codes (National Electrical Code for the US, or Canadian Electric Code).
- Lock-out power source before making adjustments, cleaning, or maintaining equipment.
- Make sure all equipment and bins are properly grounded

1.11 Decals

Main Nameplate

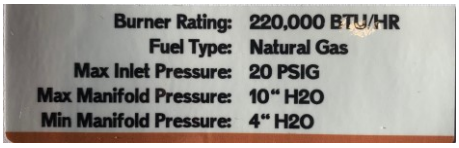

Burner Nameplate

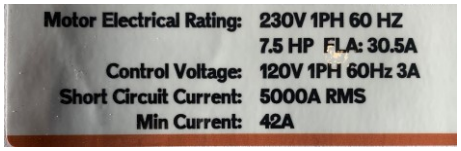

Electrical Nameplate

Shock – Arc Flash Hazard

Hot Surface

Danger 240V

1. Safety

Important

These instructions, the layout drawing, local codes and ordinances, and applicable standards such as apply to gas piping and electrical wiring comprise the basic information needed to complete the installation, and must be thoroughly understood along with general building codes before proceeding.

Chapter 2: Introduction

Congratulations on your purchase of a High Efficiency Portable Aeration Dryer (HEPAD). The HEPAD comes is several different models with customized aeration fans sizes to suit all bin aeration and in-bin drying requirements.

This manual will cover installation, operation, and maintenance on all HEPAD models.

HEPAD Style	# Burners	Air Exchanger Dimensions	Overall Dimensions	Fan Sizes Available
Standard	1	24”w x 48” l x 24” h	57”w x 125” l x 77” h	5HP 230/480V 1PH/3PH 7.5HP 230/480V 1PH/3PH
XL	1	24”w x 60” l x 24” h	69”w x 160” l x 77” h	7.5HP 230/480V 1PH/3PH 10HP 230/480V 1PH/3PH
Dual	2	48”w x 60” l x 24” h	69”w x 160” l x 77” h	20HP 230/480V 3PH 25HP 230/480V 3PH

2.1 Shipping Parts List

The HEPAD will come fully assembled and ready to connect to utilities and power. Items shipped with the HEPAD may include:

- Bin sock
  a. The bin sock will connect the HEPAD outlet to your bin air inlet. The sock that is supplied with your HEPAD will be the size as discussed with the sales department when ordered. Go Technologies can supply bin socks for almost any size connections.
- Gas Hose
  b. Use to connect your fuel supply to the HEPAD. Fuel supply must be minimum 5psi.

Please record the following information about your HEPAD.

Model Number _____

Serial Number _____

Date of Purchase _____

2.2 Location of Controls

- Main gas inlet, pressure regulator, valve and gauge assembly

  Connect only the correct fuel as specified for the HEPAD. Refer to Converting between LPG and Natural Gas. if a different fuel is required.

- Control Panel

  Consists of the Temperature Controller, Burner Control Switch, Burner indicator light, and Burner circuit breaker reset.

- Air Flow Gauge

  Each Air flow gauge is especially calibrated for the attached fan. This will give an estimated air flow to your grain bin.

- Air Outlet

  Connect the bin sock to the air outlet with ratchet straps or use our specially designed clamp to securely fasten the bin sock to the HEPAD.

- Drain Plug

  Below the air outlet is a drain plug to drain any water buildup inside the exchanger unit. This should be done prior to storage for the season.

Chapter 3: Installation and Setup

3.1 HEPAD Placement

- HEPAD requires fresh air intake and produces exhaust fumes. DO NOT setup HEPAD inside confined spaces. Always ENSURE there is adequate ventilation.
- This heater must be located at least 10ft (3m) from any propane gas cylinder. This heater shall not be directed toward any propane gas container within 20ft (6m).
- Set HEPAD on level solid ground in close proximity to bin aeration inlet.
- On trailer style HEPADS:
    a. Block wheels and ensure HEPAD will not move during operation
    b. Use jack to level HEPAD
- Clearance to Combustibles:
    a. Top: 3’
    b. Front: 3’
    c. Back: 3’
    d. Sides: 3’
    e. Flue Pipe: 3’

3.2 Connect Bin Socks and Ducting

- Bin socks connect the heater to your bin aeration ducting. They are available to different sizes to adapt the HEPAD 9 x 14 outlet to most of the common duct sizes. ENSURE you have the correct Bin Sock for your existing ductwork.
- Bin socks for any duct size can be ordered through ***Go Technologies*** Sales.
- Connect Sock to HEPAD 9 x 14 outlet.
- Secure with ratchet straps. Ensure sock will not come free during operation as injury may result.
- Connect the other end of Bin Sock to Bin Aeration Duct inlet.
- Secure with ratchet straps. Ensure bin socks are securely attached and will not come free during operation as injury may result.
- Ensure socks are not twisted or bunched together and that free unrestricted flow will occur while running.

3.3 Y-Adapter

- The Y-Adapter is an accessory that may be fitted on the discharge of the HEPAD to supply air for two (2) bins.
- To Install:
- Remove bolts securing sock adapter flange from the HEPAD.
- Install Y-adapter to flange using the same bolts.
- Ensure the foam seal is still intact. If not, Replace with new foam seal.
- Connect Socks to bins as with the standard adapter flange.
- ALWAYS ensure you have sufficient air flow in your bin prior connecting a second bin to the HEPAD
- Adjust the gate on the Y-Adapter to select the appropriate bin for drying. The adapter gate can be set at one of five positions to adjust to desired air flow in each bin.
- Never block both discharge ports at the same time or damage to the equipment may occur.

3.4 Air Flow Gauge

- An air flow gauge has been provided with each HEPAD. These gauges have been specially calibrated for the appropriate size and make of aeration fan included with your HEPAD. Using the gauge with different size fans or different models may lead to incorrect flow rates reading on the gauge.
- Adding more grain to the bin will reduce air flow. Continue adding grain to the bin to obtain the ideal air flow between 0.75-1.25 CFM per bushel and therefore maximizing the performance of your HEPAD. Refer to the Grain Drying section of this manual for more details

3.5 Electrical Connections

- The HEPAD comes equipped with a 2-pole 50A cord end connection. Plug this into the appropriate 50A receptacle.
- Any electrical modifications must be completed by a qualified Electrician and in accordance with the *Canadian Electrical Code, Part 1, CSA C22.1*
- A local disconnect is required to be installed between the dryer and the service power supply.
- Ensure breaker and cable is appropriately sized for the HEPAD. Refer to the following table for correct breaker sizes and minimum wire size.

3.6 Changing Motor Size and adjusting Input Voltage

- The HEPAD will come preconfigured with the correct voltage setup to match the installed motor size. In the event the motor has been changed with a different voltage, minor adjustments need to be made in the control panel.

3.7 Grounding

- The HEPAD is equipped with a three-prong (grounding) plug for your protection against shock hazard and should be plugged directly into a properly grounded three-prong receptacle. 115v supply must

3.8 Natural Gas Connections

- All Gas connections must be made by a qualified Gas Fitter. Verify installation meets local gas codes.
- A manual emergency shutoff valve must be located before the HEPAD and readily accessible in case of a fire or explosion at the appliance.
- Max hose length 50'. DO NOT EXCEED THIS LENGTH OF HOSE.
- Connect gas hose to heater gas inlet fitting
- Connect gas hose to gas supply outlet fitting.
- Slowly turn on gas supply valve. If there is a hissing sound or rushing of gas, turn of valve immediately as there is a leak.
- Verify all connections are free from leaks by using soapy water on all connections and look for air bubbles. If "growing" bubbles appear, there is a leak. Close gas supply valve immediately and re-tighten connections. If leaks cannot be stopped do not try to repair. Call for replacement parts. Order new parts by providing the serial number, model number, name and part number of items required.
- Inlet supply must be minimum 5PSI continuous pressure.

3.9 Propane Connections

- If cylinders are used to supply the heater, no cylinders smaller than 100lb capacity shall be used. These cylinders must supply a vapor withdrawal only.
- All cylinder connections must be made using a wrench to tighten the POL fitting.
- Be sure that the cylinder valve is in the closed position when connection or disconnecting the cylinder.
- A soap and water solution must be applied to all connections in order to leak check the system. The gas must be turned off at the propane supply cylinder(s) when the heater is not in use.
- When the heater is to be stored indoors, the connection between the propane supply cylinder(s) and the heater must be disconnected and the cylinders removed from the heater

and stored in accordance with Standard for the Storage and Handling or Liquefied Petroleum Gases, ANSI/NFPA 58 and CSA B149.1, Natural Gas and Propane Installation Code.

- **PIPING:** This heater must be installed by a qualified gas technician following local codes published by the authority having jurisdiction. Sizing of supply piping must be determined using the length of pipe run as well as total BTU rating of the appliance(s). Appropriate piping tables must be used to determine size of supply piping dependant on the length of run from source.
- Refer to the dryer rating plate for determining the minimum gas supply pressure for obtaining the maximum gas capacity for which this dryer is specified.

PRESSURES:

- MAXIMUM INLET PRESSURES: LPG: 13.0 IN. WC. NG: 10.0 IN. WC.
- MINIMUM INLET PRESSURES: LPG: 8.0 IN. WC. NG: 4.0 IN. WC.

This heater must be supplied by pressures indicated on the approval label. Over pressure may cause controls to fail. DO NOT supply this unit with more than ½ psig (14.0 in. W.C.)

Note: A second stage regulator must be installed if the supply pressure exceeds ½ psig.

Conversion of HEPAD from *LPG to Natural Gas* or from *Natural Gas to LPG* will need to be completed by a qualified gas fitter.

Chapter 4: Operation

4.1 Pre-Start

- **Check** to ensure fan intake is clear from obstructions
- **Check** burner intake vent and ensure it is clear from obstruction to air flow
- **Check** Burner exhaust vent and ensure it is not blocked and has adequate distance from combustibles
- **Check** bin sock connections are secure to ensure they will not come loose during operation
- **Check** that the gas lines are purged of air

On new installations, the gas lines will be filled with air. If not purged correctly, it may take several attempts to light the burner for the list time.

4.2 Startup Procedure

- Turn ON breaker at Main Electrical Panel
- Turn ON Gas Valve at main gas service. (Propane Tank or Gas Service)
- Turn ON gas valve on HEPAD located next to regulator inlet and verify gas pressure on main gauge is at least 5 psi.
- Set temperature control for the desired set temperature. Refer to 4.5 Temperature Controller Operation for Ink Bird Controllers and 4.6 Temperature Controller - SOLO Model for the SOLO Temperature Controllers.
- Turn on Aeration Fan switch and wait for fan to start.
- Turn on burner switch located on main control panel. If the set temperature is greater than the discharge temperature, the burner will attempt to light. If the set temperature is lower than discharge temperature, the burner will not light until the set temperature is greater than the discharge temperature.

THE BURNER WILL NOT IGNITE IF THE MAIN AERATION BLOWER FAN IS NOT RUNNING.

4.3 Burner Starting Sequence of Operation

- When the thermostat calls for heat, the blower motor will energize.
- When the motor approaches nominal running RPM, the air-proving switch closes and activates the ignition module.
- The ignition module, after a pre-purge period of approximately 30 seconds, energizes the igniter. Additionally, the gas valve is energized for this ignition trial period of 15 seconds. If a flame is detected, the ignition sensing rod "reads" a rectification signal and the gas valve remains open. The sparking stops when the flame signal is established.
- If no flame is detected, the gas valve closes and a 30 sec inter-purge period begins. After the inter-purge, the module repeats the trial for ignition period. If flame is still not established, a

second and final inter-purge followed by a final ignition trial cycle begins. After three trials, the module will lockout for a period of approximately 1 hour or until reset. (Reset is accomplished by removing power from the module for at least 5 seconds.) After this 1-hour period, the module re-attempts the full ignition sequence.

- When the heat requirement has been met and the thermostat opens, the burner and fan shut off with no post purge.

4.4 Shutdown Procedure

- Turn off burner switch.
- Turn off Fan Switch if required. It may be desirable to continue running the aeration fan to cool the grain and continue drying for a couple hours after removing the heat.
- Close Gas Valves when burner is not in use.
- Disconnect Power to HEPAD when main fan is not being used.

4.5 Temperature Controller – Ink Bird Model

- Main Panel Layout

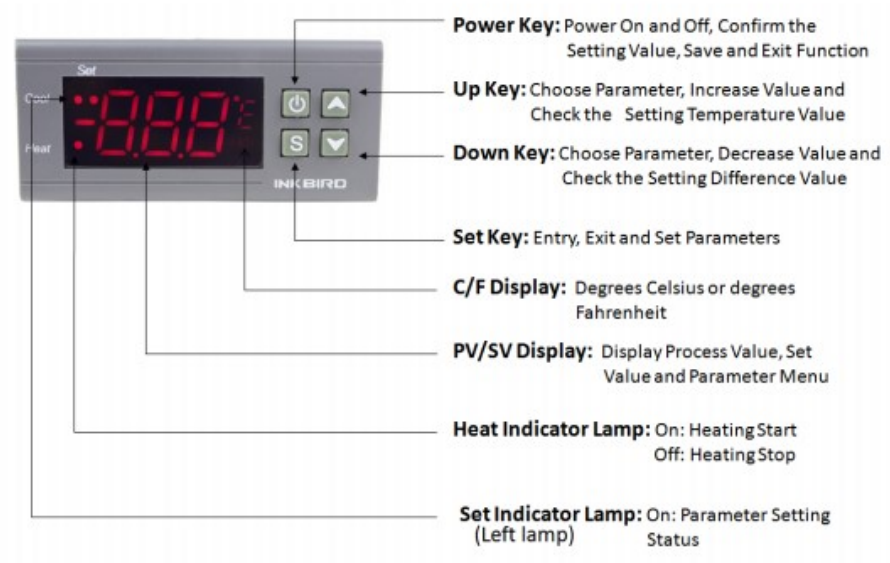

- **Key Operations Instruction**
  - **a. Check Heat Setpoint:**

    In normal working status, press "▲" key once, it will display the setting temperature value; press "▼" key once, it will display the difference value;

b. Change Heat Set Point:

- In normal working status, press and hold "**S**" for more than 3s to enter set mode, set indicator lamp is on, screen displays the first menu code "tS". If "tS" is not displayed, press the "▲" key or the "▼" key to move up or down the menu item and display the menu code until "tS" is displayed
- Press the "**S**" key to enter the parameter setting of Temperature Set menu, the parameter value starts to flash.
- Press "▲" key or "▼" key to adjust the parameter value of current menu.
- After the value is set, press "⏻" key to save the parameter modified value, and return to the normal temperature value.
- If no operation within 10s, the display will exit the menu automatically and return to normal temperature display status, it will not save any parameter modification.

c. Change the Heat differential temperature

- After the burner reaches setpoint and turns off, it will not re-ignite until temperature falls below setpoint – differential temperature.
- In normal working status, press and hold "**S**" for more than 3s to enter set mode, set indicator lamp is on, screen displays the first menu code "tS". Press the "▲" key or the "▼" key to move up or down the menu item and display the menu code until "dS" is displayed
- Press the "**S**" key to enter the parameter setting of Differential Set menu, the parameter value starts to flash.
- Press "▲" key or "▼" key to adjust the parameter value of current menu.
- After the value is set, press "⏻" key to save the parameter modified value, and return to the normal temperature value.
- If no operation within 10s, the display will exit the menu automatically and return to normal temperature display status, it will not save any parameter modification.

- **Operating instruction:**

a. In normal working status, press and hold "⏻" key for more than 3s to turn off the controller;

b. In Power-off Status, press and hold "⏻" key for more than 1s to turn on the controller.

c. If the measuring temperature ≤ temperature set value "tS" minus difference set value "dS", the controller starts heating, the heat indicator lamp lights on, and the burner will be start.

d. If the measuring temperature ≥ temperature set value, the heat indicator lamp turns off, and the burner shuts off.

4.6 Temperature Controller - SOLO Model

- Display, and Keypad

  The SOLO temperature controller has a two color seven segment LCD display and four function buttons.

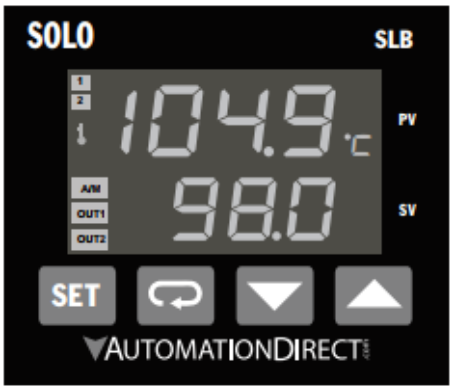

PV Display
Displays the temperature value from the HEPAD Outlet.

SV Display
Displays the set point of the HEPAD. The burner will shut down when PV is greater than this value.

SET Button: The Set button is for advanced programming features and has been disabled

Rotate Button: The Rotate button is for advanced programming features and has been disabled

Down Button: Press the Down button to decrease values displayed on the SV display. Hold down this button to speed up the decrement.

Up Button: Press the Up button to increase values displayed on the SV display. Hold down this button to speed up the increment.

- The SOLO Temperature Controller will control the burner operation to maintain the desired set temperature (SV). When the HEPAD heats to the SV, the burner will shutdown. As the HEPAD cools and PV drops to 3^0C below SV, the burner will re-ignite and begin heating again.

Chapter 5: Service

Warning
Disconnect power and gas prior to performing any maintenance or cleaning on this machine. Serious injury or death may occur.

5.1 General Maintenance

The HEPAD requires minor maintenance to keep it running at peak performance. Following some basic maintenance guidelines, your HEPAD will provide many years of service.

- **ALWAYS** Isolate gas and power to HEPAD when not in use for extended periods of time
- **ALWAYS** Remove drain plug and tilt unit to allow water to drain from exchanger
- **ALWAYS** inspect fan inlet for excess debris that may damage the fan or reduce performance
- General cleaning around frame, motor and exchanger will prevent excess dirt buildup causing potential areas for rust to form.

5.2 Drain Plug – Annual Check or when put in storage

Moisture may build up inside the exchanger unit while not in use. There is a drain located on the back side of the exchanger. Remove the drain plug and tilt the HEPAD so any water buildup can escape from the exchanger.

a. Locate Drain Plug
b. Tilt HEPAD slightly to allow water to drain toward drain Plug
c. Remove plug and allow water to drain
d. Replace Plug

5.3 Burner – Annual Check

- For best performance, certain minimal maintenance procedures should be performed before each heating season:
  a. Before performing any services or maintenance, shut off gas and electrical supply to heater.
  b. Check condition of forced air blower scroll and motor. Dirt and dust may be blown or vacuumed from the blower.
  c. Check condition of burner. Remove any foreign objects or debris from inside the burner box or burner cup.
  d. Inspect the igniter. Replace igniter if there is excessive wear or erosion, breakage or other defects.
  e. Be sure the burner observation window is clean and free of cracks or holes. Clean or replace as necessary.

f. A service agency qualified to adjust and repair infrared heaters should be engaged for service other than routine maintenance.

g. Be sure vent terminal and fresh air inlet are free from obstructions. If either pipe is restricted, the safety air switch will not operate properly, and the heater could fail to operate.

5.4 Checking for gas leaks – Annual Check

- Slowly tun on main service gas valve and local gas valve on HEPAD
- Spray a mixture of soapy water on all gas fittings.
- Inspect fittings for air bubbles. If "growing" bubbles appear, there is a leak. Close gas supply valve immediately and re-tighten connections. If leaks cannot be stopped do not continue using HEPAD until the leaks are fixed.
- If needed contact a qualified gas fitter to help repair the problem.
- Call for replacement parts. Order new parts by providing the serial number, model number, name and part number of items required

5.5 Checking gas valve tightness - Annual Check

- Slowly tun on main service gas valve and local gas valve on HEPAD
- Observe the reading on the pressure gauge near the regulator.
- Slowly tun off main service gas valve and local gas valve on HEPAD
- Wait 30 minutes and note the reading on the pressure gauge, If the pressure dropped, the gas valve may be in need of repair.
- Contact a qualified gas fitter to further diagnose and repair the problem.
- Call for replacement parts. Order new parts by providing the serial number, model number, name and part number of items required

5.6 Converting between LPG and Natural Gas.

Conversion of HEPAD from *LPG to Natural Gas* or from *Natural Gas to LPG* will need to be completed by a qualified gas fitter

Chapter 6: Grain Drying

Use this information as a guide while drying grain. There are many factors that affect how grain will dry and each system may be run differently to achieve the same desired result.

6.1 Maximum allowable air temperatures for grain drying

	Seed	Commercial	Feed
Wheat	60 °C	65°C	80-100°C
Oats	50°C	60°C	80-100°C
Barley	45°C	55°C	80-100°C
Flax	45°C	80°C	80-100°C
Canola	45°C	82°C	---
Peas	40°C	---	45°C

Table 3

6.2 Maximum Moisture Content Levels for Straight Grade Seed

Barley (feed)	14.8%
Barley (malt)	13.5%
Canola	10%
Chickpeas	14%
Corn	15.5%
Fababeans	16%
Flax	10%
Lentils	14%
Oats	14%
Peas	16%
Rye	14%
Soybean	14%
Wheat	14.5%

Table 4

6.3 Recommended Air Flow

It is recommended to maintain 0.75–1.25 CFM per bushel air flow when drying grain. Air flow below this will not have sufficient air movement to dry your grain. Use the air flow gauge on the HEPAD as a guide when to stop filling your bin.

6.4 Equilibrium Moisture Content (EMC) of Grain

The EMC represents the moisture content that the grain will eventually equilibrate to if the air conditions remain constant for a length of time. It can be used to predict how the temperature and RH% of air will affect drying grain. Although air conditions are rarely constant for longer than an hour, the EMC information can still be used to determine the range of air temperatures and relative humidity's that will achieve drying.

Adding supplementary heat with the HEPAD further reduces the RH% of the air as warm air has a higher water carrying capacity. **Generally, for every 10°C increase in temperature the RH% of the air is cut in half**.

For example: Ambient air is at 5°C and 70% RH. According to the EMC chart for wheat, the lowest you can dry is 16.1%. If we heat the air with the HEPAD to 15°C the RH drops to 35%. We can therefore theoretically dry down to 10.3%.

Temp °C	Relative humidity (%)										
	35	40	45	50	55	60	65	70	75	80	85
-2	11.5	12.2	13.0	13.7	14.5	15.3	16.0	16.9	17.7	18.7	19.8
2	11.1	11.9	12.6	13.4	14.1	14.9	15.6	16.4	17.3	18.2	19.3
5	10.9	11.7	12.4	13.1	13.8	14.6	15.3	16.1	17.0	17.9	19.0
8	10.7	11.5	12.2	12.9	13.6	14.3	15.1	15.8	16.7	17.6	18.7
10	10.6	11.3	12.0	12.7	13.4	14.2	14.9	15.7	16.5	17.4	18.5
13	10.4	11.1	11.8	12.5	13.2	13.9	14.6	15.4	16.2	17.1	18.2
15	10.3	11.0	11.7	12.4	13.1	13.8	14.5	15.2	16.1	17.0	18.0
18	10.1	10.8	11.5	12.2	12.9	13.6	14.3	15.0	15.8	16.7	17.7
22	9.9	10.6	11.3	11.9	12.6	13.3	14.0	14.7	15.5	16.4	17.4
26	9.7	10.4	11.1	11.7	12.4	13.0	13.7	14.4	15.2	16.1	17.1
28	9.6	10.3	11.0	11.6	12.3	12.9	13.6	14.3	15.1	15.9	16.9

EMC Chart for Wheat Hard Red Spring from PAMI.CA

6.5 ECM Charts

Canola - EMC Table								
Temp ^{0}C	Relative Humidity (%)							
	20	30	40	50	60	70	80	90
-2	4.9	5.6	6.5	7.4	8.7	10.3	12.9	18.1
5	4.7	5.4	6.2	7.2	8.3	9.9	12.4	17.5
10	4.6	5.3	6.1	7.0	8.1	9.7	12.1	17.1
15	4.4	5.1	5.9	6.8	7.9	9.4	11.8	16.7
20	4.3	5.0	5.8	6.6	7.7	9.2	11.5	16.3
25	4.2	4.9	5.6	6.5	7.5	9.0	11.3	16.0
30	4.1	4.7	5.5	6.3	7.3	8.7	11.0	15.6
35	4.0	4.6	5.3	6.1	7.1	8.5	10.7	15.2
40	3.9	4.5	5.2	6.0	6.9	8.3	10.4	14.8

Oats - EMC Table								
Temp ^{0}C	Relative Humidity (%)							
	20	30	40	50	60	70	80	90
-2	7.3	8.6	9.8	11.1	12.6	14.3	16.7	20.9
5	7.0	8.3	9.5	10.8	12.2	13.9	16.3	20.4
10	6.9	8.1	9.3	10.6	11.9	13.6	15.9	20.0
15	6.7	7.9	9.1	10.3	11.7	13.3	15.6	19.5
20	6.5	7.7	8.9	10.1	11.4	13.0	15.2	19.1
25	6.4	7.5	8.7	9.8	11.1	12.7	14.9	18.7
30	6.2	7.4	8.4	9.6	10.8	12.4	14.5	18.3
35	6.0	7.2	8.2	9.3	10.6	12.1	14.2	17.8
40	5.9	7.0	8.0	9.1	10.3	11.8	13.8	17.4

Wheat Durum - EMC Table								
Temp ^{0}C	Relative Humidity (%)							
	20	30	40	50	60	70	80	90
-2	7.7	9.1	10.3	11.7	13.1	14.9	17.3	21.6
5	7.5	8.8	10.1	11.4	12.8	14.6	16.9	21.1
10	7.3	8.7	9.9	11.2	12.6	14.3	16.6	20.7
15	7.2	8.5	9.7	11.0	12.4	14.0	16.4	20.4
20	7.1	8.3	9.5	10.8	12.1	13.8	16.1	20.0
25	6.9	8.2	9.3	10.5	11.9	13.5	15.8	19.7
30	6.8	8.0	9.1	10.3	11.7	13.3	15.5	19.3
35	6.6	7.8	9.0	10.1	11.4	13.0	15.2	19.0
40	6.5	7.7	8.8	9.9	11.2	12.7	14.9	18.6

Wheat Hard Red Winter - EMC Table								
Temp ^0C	Relative Humidity (%)							
	20	30	40	50	60	70	80	90
-2	8.4	9.9	11.4	12.7	14.2	15.9	18.0	21.1
5	8.0	9.6	11.0	12.4	13.9	15.5	17.6	20.8
10	7.7	9.3	10.7	12.1	13.6	15.3	17.4	20.6
15	7.5	9.0	10.5	11.9	13.4	15.1	17.2	20.4
20	7.2	8.8	10.2	11.7	13.2	14.9	17.0	20.2
25	7.0	8.6	10.0	11.5	13.0	14.7	16.8	20.0
30	6.8	8.3	9.8	11.2	12.8	14.5	16.6	19.9
35	6.5	8.1	9.6	11.0	12.6	14.3	16.5	19.7
40	6.3	7.9	9.4	10.8	12.4	14.1	16.3	19.5

Barley - EMC Table								
Temp ^0C	Relative Humidity (%)							
	20	30	40	50	60	70	80	90
-2	8.8	10.4	11.9	13.3	14.8	16.6	18.7	21.9
5	8.3	9.9	11.4	12.8	14.4	16.1	18.3	21.5
10	7.9	9.6	11.1	12.5	14.1	15.8	18.0	21.3
15	7.6	9.2	10.7	12.2	13.8	15.5	17.7	21.0
20	7.3	8.9	10.4	11.9	13.5	15.3	17.5	20.8
25	7.0	8.6	10.1	11.6	13.2	15.0	17.2	20.6
30	6.7	8.4	9.9	11.4	13.0	14.8	17.0	20.3
35	6.4	8.1	9.6	11.1	12.7	14.5	16.8	20.1
40	6.1	7.8	9.4	10.9	12.5	14.3	16.6	19.9

Oats - EMC Table								
Temp ^0C	Relative Humidity (%)							
	20	30	40	50	60	70	80	90
-2	7.3	8.6	9.8	11.1	12.6	14.3	16.7	20.9
5	7.0	8.3	9.5	10.8	12.2	13.9	16.3	20.4
10	6.9	8.1	9.3	10.6	11.9	13.6	15.9	20.0
15	6.7	7.9	9.1	10.3	11.7	13.3	15.6	19.5
20	6.5	7.7	8.9	10.1	11.4	13.0	15.2	19.1
25	6.4	7.5	8.7	9.8	11.1	12.7	14.9	18.7
30	6.2	7.4	8.4	9.6	10.8	12.4	14.5	18.3
35	6.0	7.2	8.2	9.3	10.6	12.1	14.2	17.8
40	5.9	7.0	8.0	9.1	10.3	11.8	13.8	17.4

Lentils - EMC Table											
Temp ^{0}C	Relative Humidity (%)										
	35	40	45	50	55	60	65	70	75	80	85
-2	9.3	10.3	11.2	12.3	13.4	14.6	16.0	17.6	19.5	21.9	25
2	9.1	10	11	12	13.1	14.3	15.7	17.3	19.1	21.5	24.5
5	9	9.9	10.8	11.8	12.9	1..1	15.4	17	18.8	21.1	24.2
8	8.8	9.7	10.6	11.6	12.7	13.9	15.2	16.7	18.5	20.8	23.8
10	8.7	9.6	10.5	11.5	12.5	13.7	15	16.5	18.3	20.6	23.6
13	8.5	9.4	10.3	11.3	12.3	13.5	14.8	16.3	18	20.3	23.2
15	8.4	9.3	10.2	11.1	12.2	13.3	14.6	16.1	17.8	20.1	23
18	8.3	9.1	10	10.9	12	13.1	14.3	15.8	17.5	19.7	22.6
22	8.1	8.9	9.7	10.7	11.7	12.8	14	15.4	17.1	19.3	22.1
26	7.8	8.6	9.5	10.4	11.4	12.4	13.6	15	16.7	18.8	21.6
28	7.7	8.5	9.4	10.3	11.2	12.3	13.5	14.9	16.5	18.6	21.4

Peas - EMC Table											
Temp ^{0}C	Relative Humidity (%)										
	35	40	45	50	55	60	65	70	75	80	85
-2	8.9	9.5	10	10.6	11.2	12	12.8	13.8	15	16.5	18.6
2	8.8	9.3	9.8	10.4	11	11.8	12.6	13.5	14.7	16.2	18.3
5	8.7	9.2	9.7	10.3	10.9	11.6	12.4	13.4	14.5	16	18
8	8.5	9	9.6	10.1	10.7	11.4	12.2	13.2	14.3	15.8	17.8
10	8.5	8.9	9.5	10	10.6	11.3	12.1	13.1	14.2	15.7	17.7
13	8.3	8.8	9.3	9.9	10.5	11.2	12	12.9	14	15.5	17.4
15	8.3	8.7	9.3	9.8	10.4	11.1	11.9	12.8	13.9	15.3	17.3
18	8.2	8.6	9.1	9.7	10.3	10.9	11.7	12.6	13.7	15.1	17.1
22	8	8.5	9	9.5	10.1	10.7	11.5	12.4	13.5	14.9	16.8
26	7.9	8.3	8.8	9.3	9.9	10.6	11.3	12.2	13.3	14.6	16.5
28	7.8	8.2	8.7	9.2	9.8	10.5	11.2	12.1	13.1	14.5	16.4

Chapter 7: Troubleshooting

7.1 General Issues

Problem	Possible Causes/ Solutions
Main Aeration Fan will not run.	- Check that main power and circuit breakers are turned ON. - Check for tripped breaker, Defective transformer or wiring. - Check for defective ON/OFF switch. - Check all wiring connections. See schematic or wiring diagrams - Check magnetic contactor for malfunction. - Call Qualified electrician for more detailed troubleshooting
Main Aeration Fan runs for a short period of time then shuts off.	- Check to verify that power supply cable is the proper size. If using an extension cord, check that the wire size is correct. Refer to **Table 1** for correct wire sizes - Check incoming supply voltage. If low contact power company. - Check full load amps. Verify correct with specifications section of this manual. - Check for power failure.
No Gas Supply	- Check Main gas supply valve and ensure it is open. - Check to see if manual supply valve to heater is open. No manifold pressure indicates valve is closed.
Burner fan will not run with main aeration fan operating.	- Check Temperature controller is set correctly. If air temp is above Controller set temperature, burner will not light - Check burner switch position and verify that it has not malfunctioned. - Check blower for obstructions. Replace blower if necessary. - Check vacuum switch is operating correctly and that the hose has not been disconnected - Is combination gas control gas valve or the ignition module is faulty.
Burner will not fire but burner fan is running	- Check to see if gas lines were properly purged of air - Check blower for obstructions. Replace blower if necessary. - Check gas supply pressure is a minimum of 5 psi. - Check gas line for obstructions, closed valves, plugged solenoids, etc. - Is combination gas control gas valve or the ignition module is faulty.

Burner operates but will not cycle off when temperature is too high.	- Check setting for cycle thermostat. Manually increase the set point. It should cycle the unit on. Manually decrease the set point. The burner should turn off. If not repair or replace the cycle thermostat.
Burner cycles OFF without reaching high-limit setting.	- Check setting for cycle thermostat. Manually increase the set point. It should cycle the unit on. Manually decrease the set point. The burner should turn off. If not repair or replace the cycle thermostat. - Check ground wire continuity. - Check insulation on the igniter leads. - Measure flame signal current; it should be between 2 to 6 micro amps dc. Minimum 0.8 micro amps. - Clean flame rod if necessary. - Replace module if necessary.

7.2 Burner Module Error Codes

MODULE CODES

1. FLASH – Air Flow Fault
2. FLASH – Flame Sensor Issue
3. FLASH – Ignition Lockout After 3 Tries

POTTED [CHANNEL PRODUCTS]

1. FLASH – Air Flow Fault
2. FLASH – Flame Sensor Issue
3. FLASH – Ignition Lockout After 3 Tries
4. FLASH – Gas Valve Not Connected

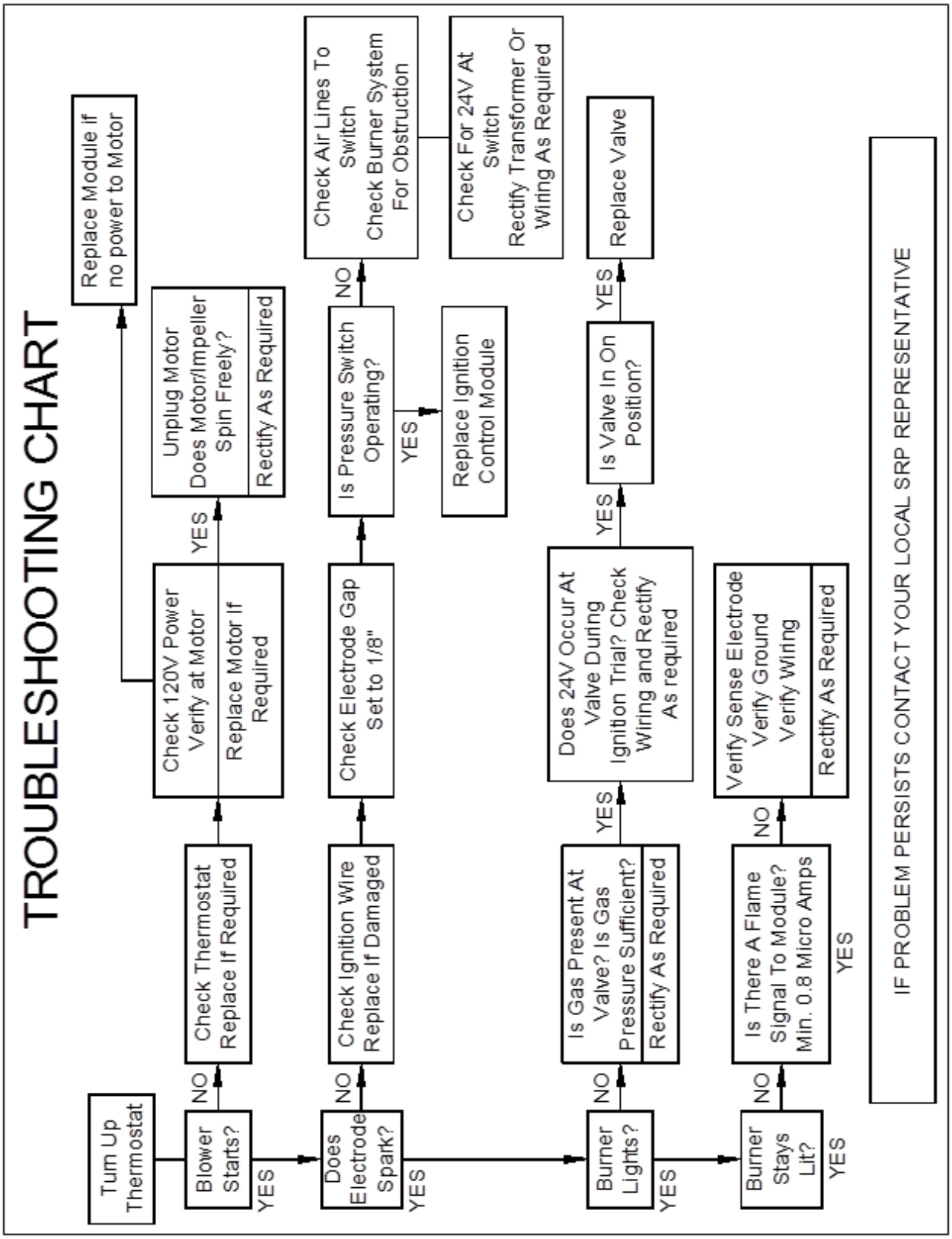
TROUBLESHOOTING CHART
Turn Up Thermostat
Blower Starts?
NO
YES
Check Thermostat Replace If Required
Check 120V Power Verify at Motor
Replace Motor If Required
Replace Module if no power to Motor
YES
Unplug Motor Does Motor/Impeller Spin Freely?
Rectify As Required
Does Electrode Spark?
NO
YES
Check Ignition Wire Replace If Damaged
Check Electrode Gap Set to 1/8"
Is Pressure Switch Operating?
NO
YES
Replace Ignition Control Module
Check Air Lines To Switch Check Burner System For Obstruction
Check For 24V At Switch Rectify Transformer Or Wiring As Required
Burner Lights?
NO
YES
Is Gas Present At Valve? Is Gas Pressure Sufficient?
Rectify As Required
Does 24V Occur At Valve During Ignition Trial? Check Wiring and Rectify As required
YES
Is Valve In On Position?
YES
Replace Valve
Burner Stays Lit?
NO
YES
Is There A Flame Signal To Module? Min. 0.8 Micro Amps
NO
YES
Verify Sense Electrode Verify Ground Verify Wiring
Rectify As Required
IF PROBLEM PERSISTS CONTACT YOUR LOCAL SRP REPRESENTATIVE

Chapter 8: Specifications

8.1 HEPAD Specifications

Ambient Temperature	-10 ^{0}C to 40 ^{0}C
Max Temperature Rise	60 ^{0}C
Max Discharge Temperature	60 ^{0}C

8.2 Fan Electrical Information

Fan Size	Voltage	Full Load Amps	Breaker size	Min. Wire Size
5 HP	230V 1PH	20	50	10
	230V 3PH	12.4	30	12
	480V 3PH	6.2	15	12
7.5HP	230V 1PH	30.5	80	8
	230V 3PH	17	40	10
	480V 3PH	8.5	20	12
10HP	230V 1PH	43	100	6
	230V 3PH	25	60	10
	480V 3PH	12.5	30	12
20HP	230V 3PH	45.8	110	6
	480V 3PH	22.9	50	10
25HP	230V 3PH	59	125	3
	480V 3PH	29.5	70	8

Table 1

8.3 Fan Performance

- Performance under actual operating conditions may differ from these results depending on variables such as temperature, barometric pressure, humidity, and elevation above sea level

Static Pressure (inches)	Airflow (CFM) @ 3450 RPM				
	5 HP	7.5 HP	10 HP	20HP	25HP
4	4100	5325	6400	8261	9546
6	3520	4820	5800	7870	9059
8	3060	4280	5000	7553	8465
10	2470	3510	4200	7235	7939
12	1760	2300	3600	6538	7183

Table 2

8.4 Burner Specifications

- There are two different Burners that may be included into the HEPAD depending on desired fuel gas and heat requirements.

Model	Fuel Type	Min Fuel Pressure	BTU Rating	Electrical
UAX220N	Natural Gas	5” wc	220,000 BTU/HR	120VAC, 60HZ, 1A Direct Spark Ignition
UAX220LP	Propane	11.5” wc		

Chapter 9: Electrical Drawings

If any of the original wire as supplied with the HEPAD must be replaced, it must be replaced with wiring that is equal to or greater than the original wire type, size, and temperature rating.

9.1 Fan Motor Wiring Diagrams

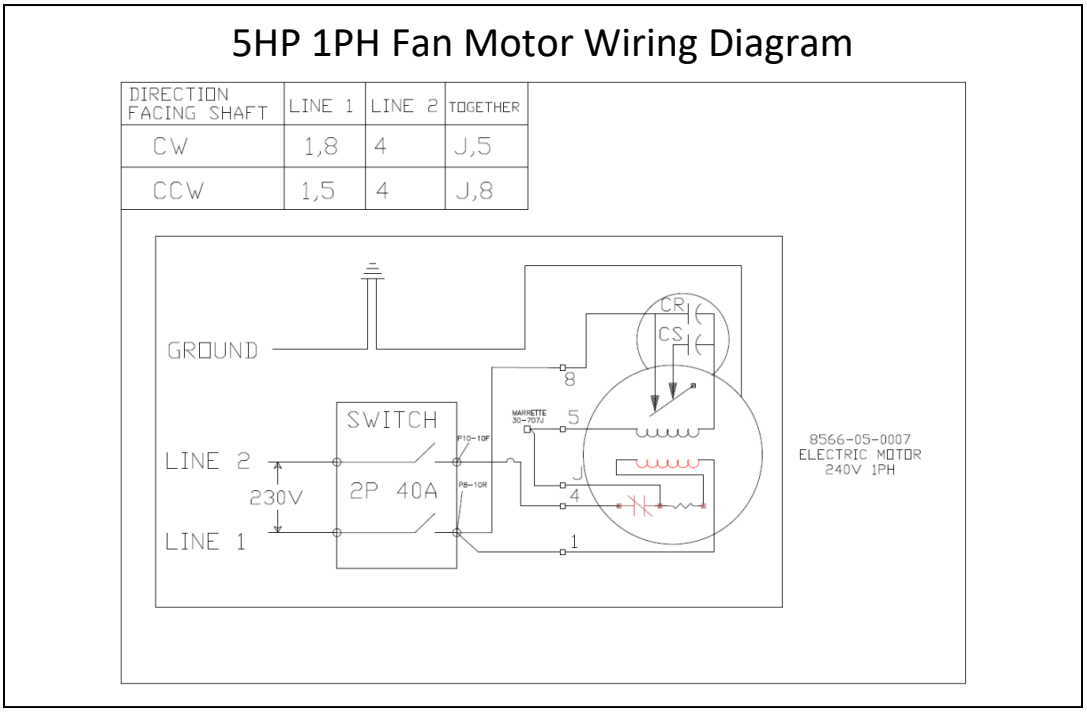

7.5 - 10HP 1PH Fan Motor Wiring Diagram

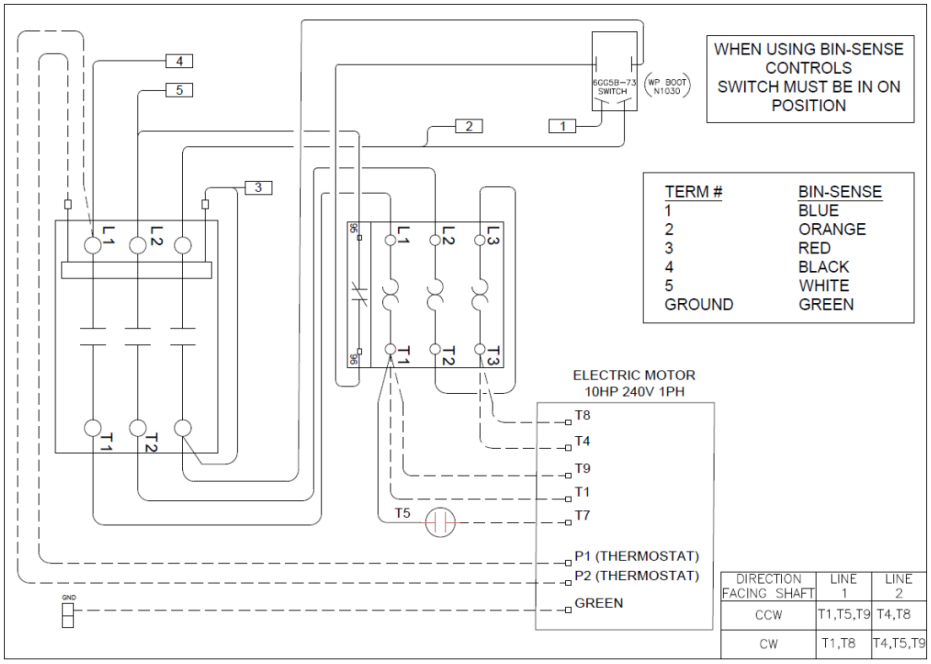

230V 3PH Fan Motor Wiring Diagram

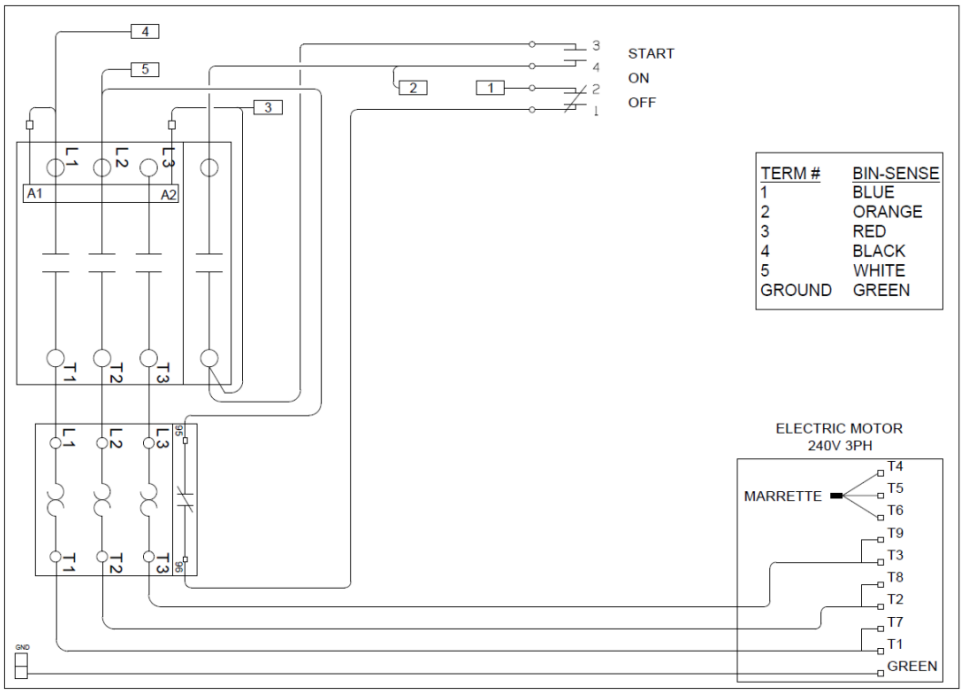

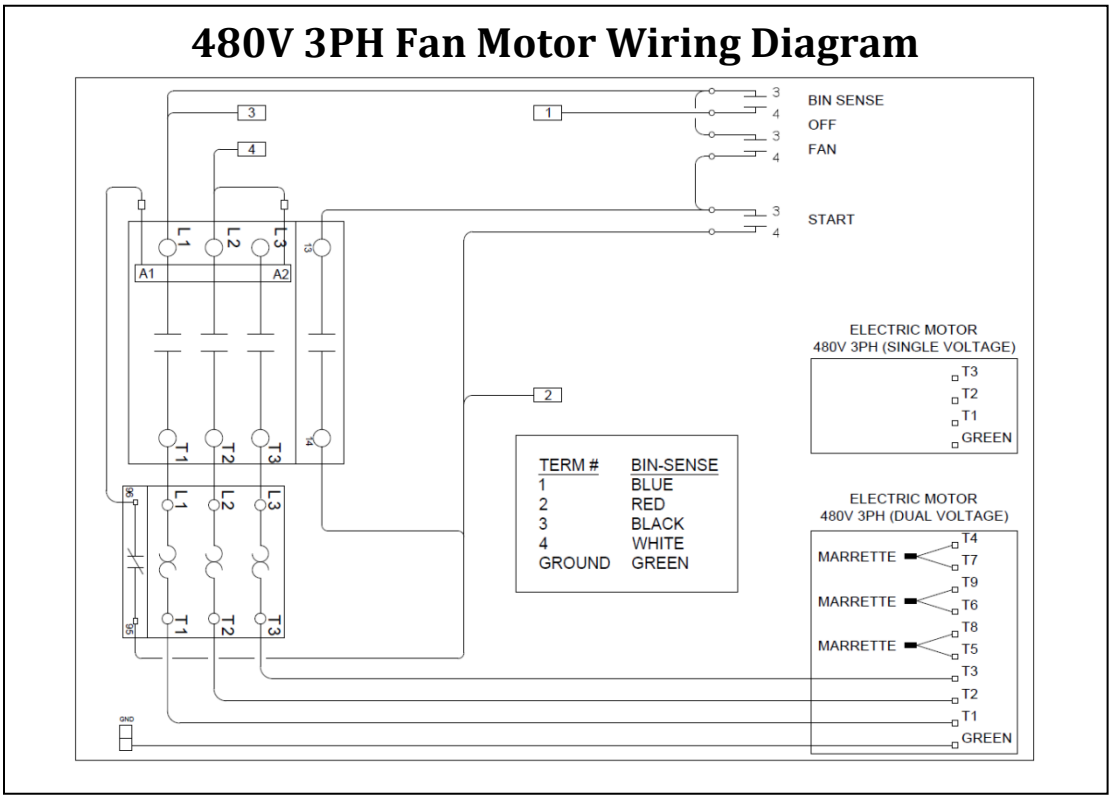

9.2 Burner Schematics

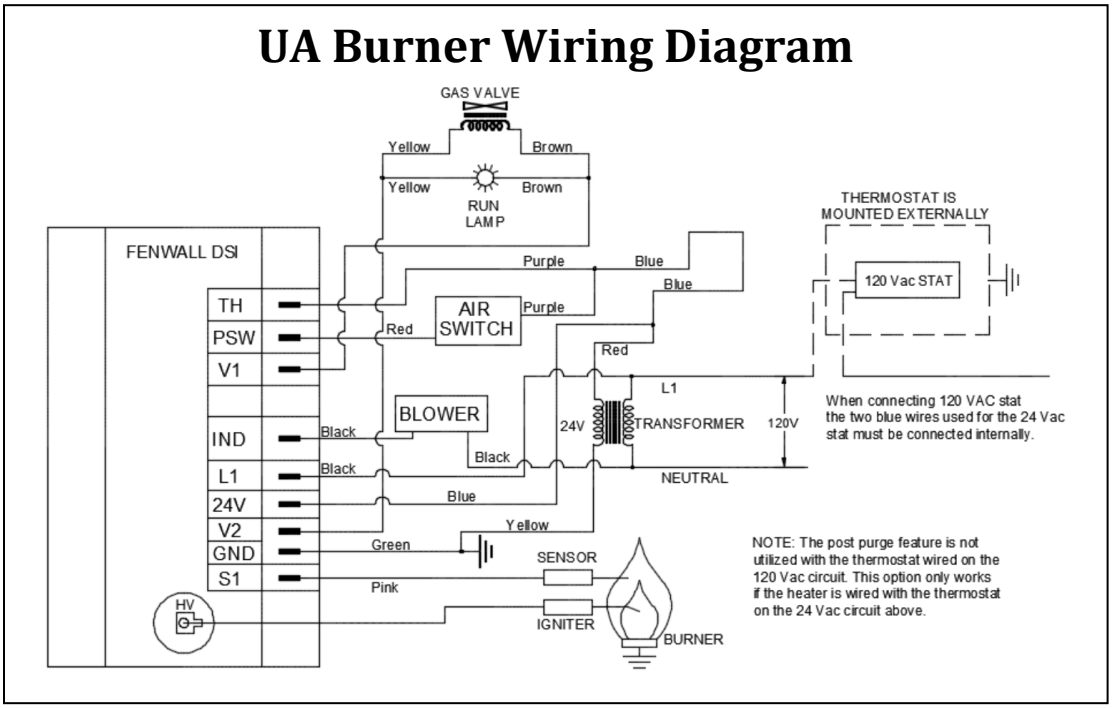

9.3 Electrical Schematics

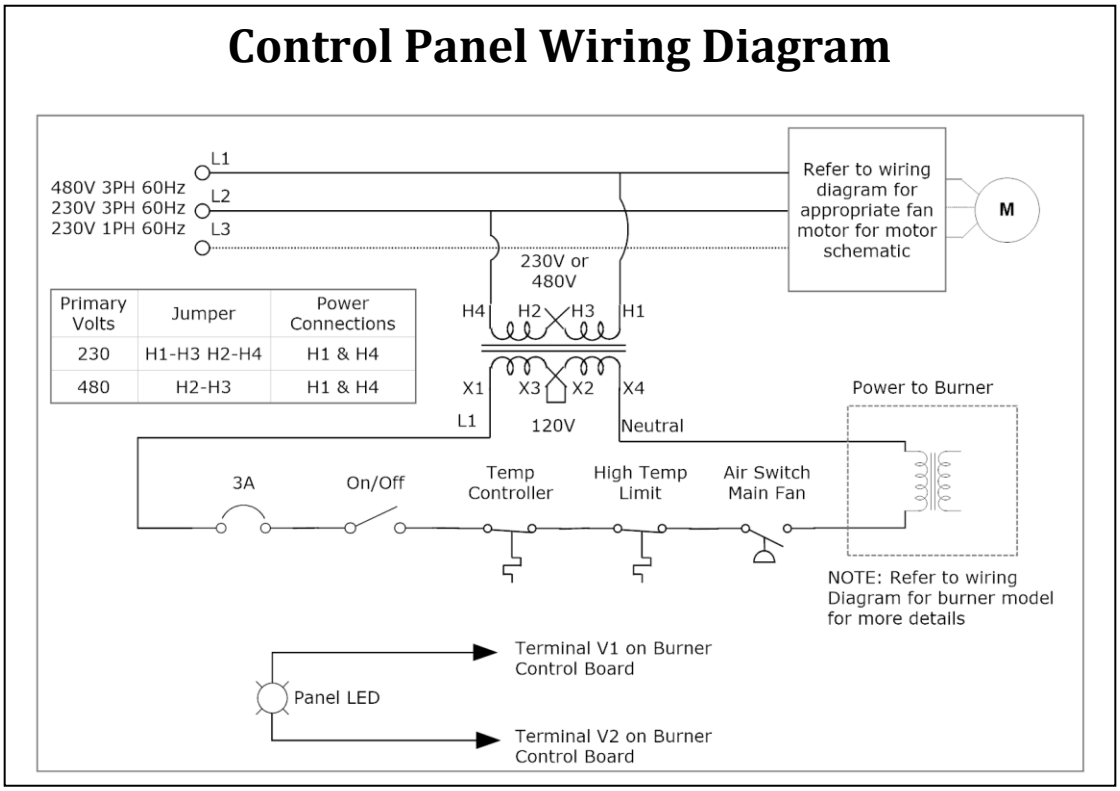

Primary Volts	Jumper	Power Connections
230	H1-H3 H2-H4	H1 & H4
480	H2-H3	H1 & H4

Chapter 10: P&ID Drawings

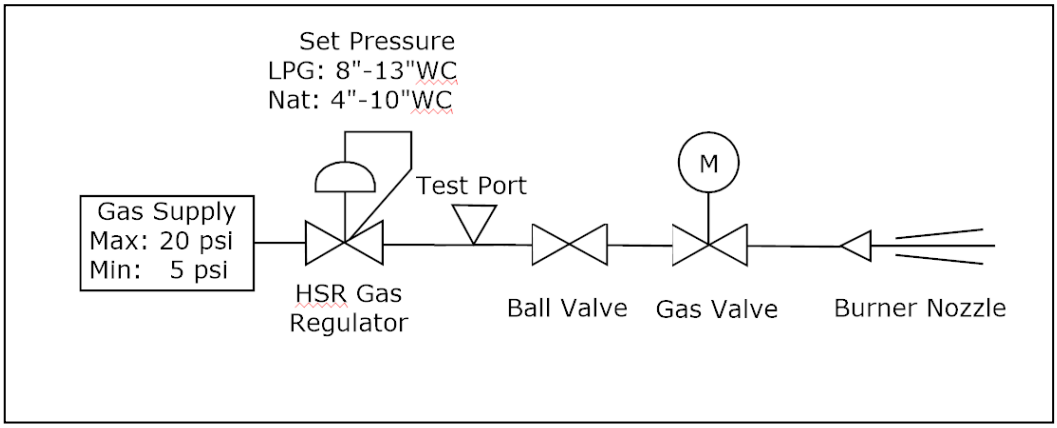

Chapter 11: Parts List

11.1 Burner Replacement Parts

ITEM	PART #	DESCRIPTION
1	CE057	INDICATOR LIGHT
2	CE266	IGNITION MODULE- MODELS - UA/UX
	CE201	IGNITION MODULE- MODELS - UXR
3	CG142	HONEYWELL VALVE TRAIN REPLACEMENT KIT - NAT.
	CG143	HONEYWELL VALVE TRAIN REPLACEMENT KIT - LPG.
4	CE058	TRANSFORMER
5	CE004	BLOWER FOR U & T MODELS - 40,000 TO 175,000 BTU
	CE013	BLOWER MOTOR - 220,000 BTU
6	CH007	BLOWER GASKET
7	CE003	FLAME SENSOR ELECTRODE
8	CE002	SPARK ELECTRODE
9	CE006	IGNITION WIRE

ITEM	PART #	DESCRIPTION
10	UG001P	BURNER CUP
	UG007	BURNER CUP ASSEMBLY (C/W ELECTRODES)
11	CH011	SIGHT GLASS ASSEMBLY
12	CE023	AIR SWITCH - MODELS - 220,000 BTU
13	CE010	POWER CORD
14	CH001	BURNER GASKET
15	VS022	AIR INLET KIT

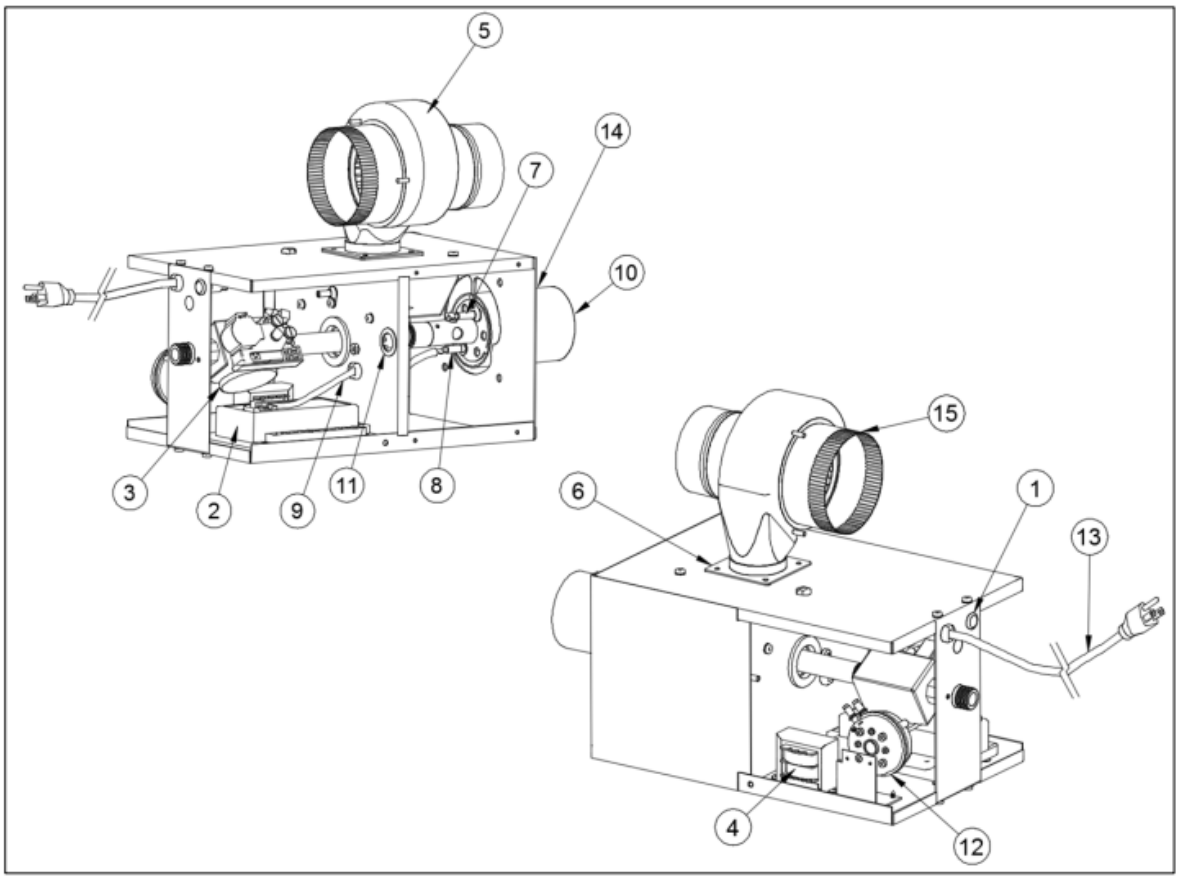

11.2 Fan Replacement Parts 5HP – 10HP Fan Motors

Item#	Description	5HP	7.5HP	10HP
1	Fan Housing	18-114057-23	18-114058-23	18-114157-23
2	Fan Rotor	18-114160	18-114161	18-113506
3	Split Taper Bushing	7000-02-0875	7000-02-1125	7000-03-1625
4	Bell Inlet	18-114066-1	18-114067-1	18-114158-1
5	Inlet Screen	43-114048-1	43-114159-1	43-114159-1

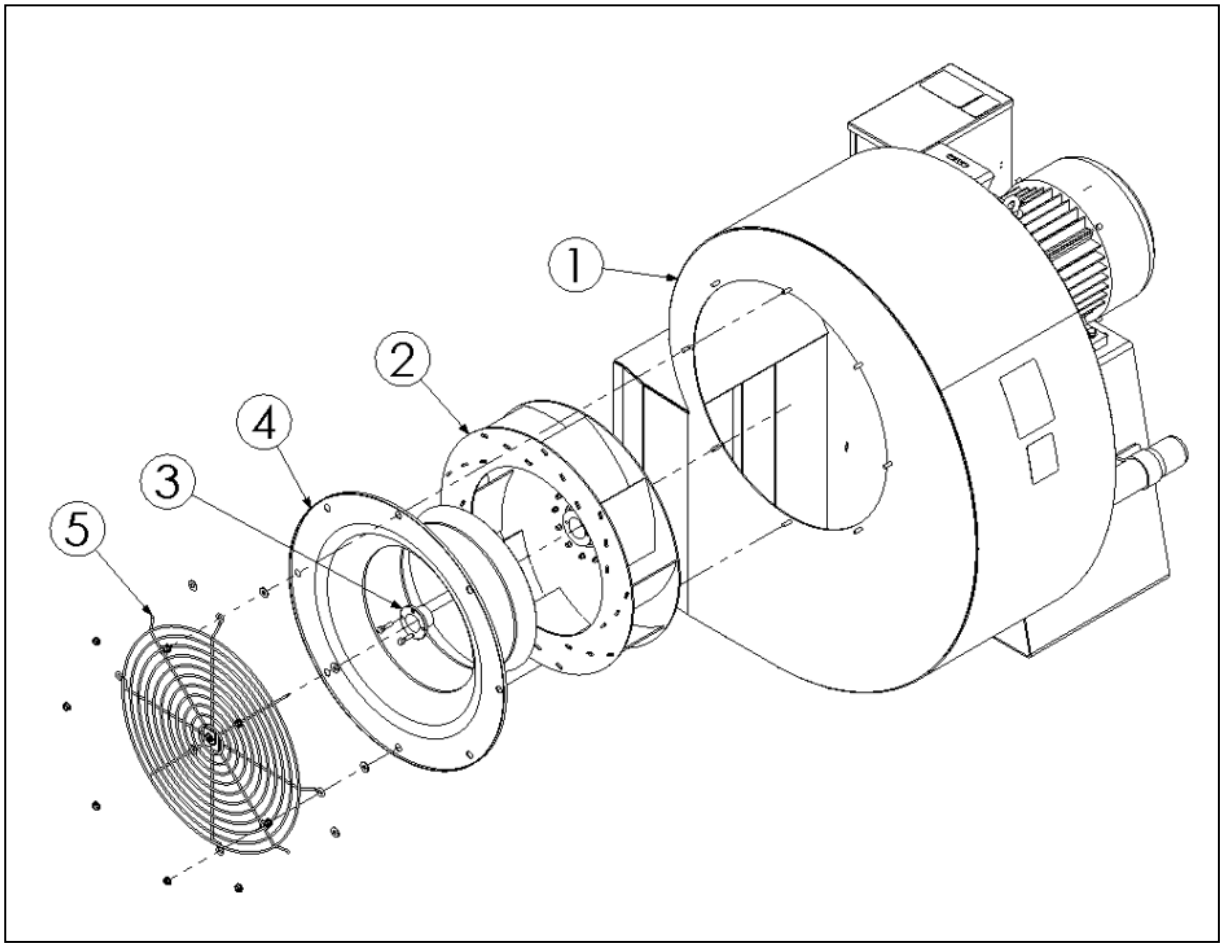

11.3 Fan Replacement Parts 20HP – 25HP Fan Motors

Item#	Description	20HP	25HP
1	Fan Housing	18-113688-23	18-113695-23
2	Fan Rotor	18-113691	18-113698
3	Split Taper Bushing	7000-03-1625	
4	Bell/Cone Inlet	18-113693-1	18-113700-1
5	Inlet Screen	18-114116-1	

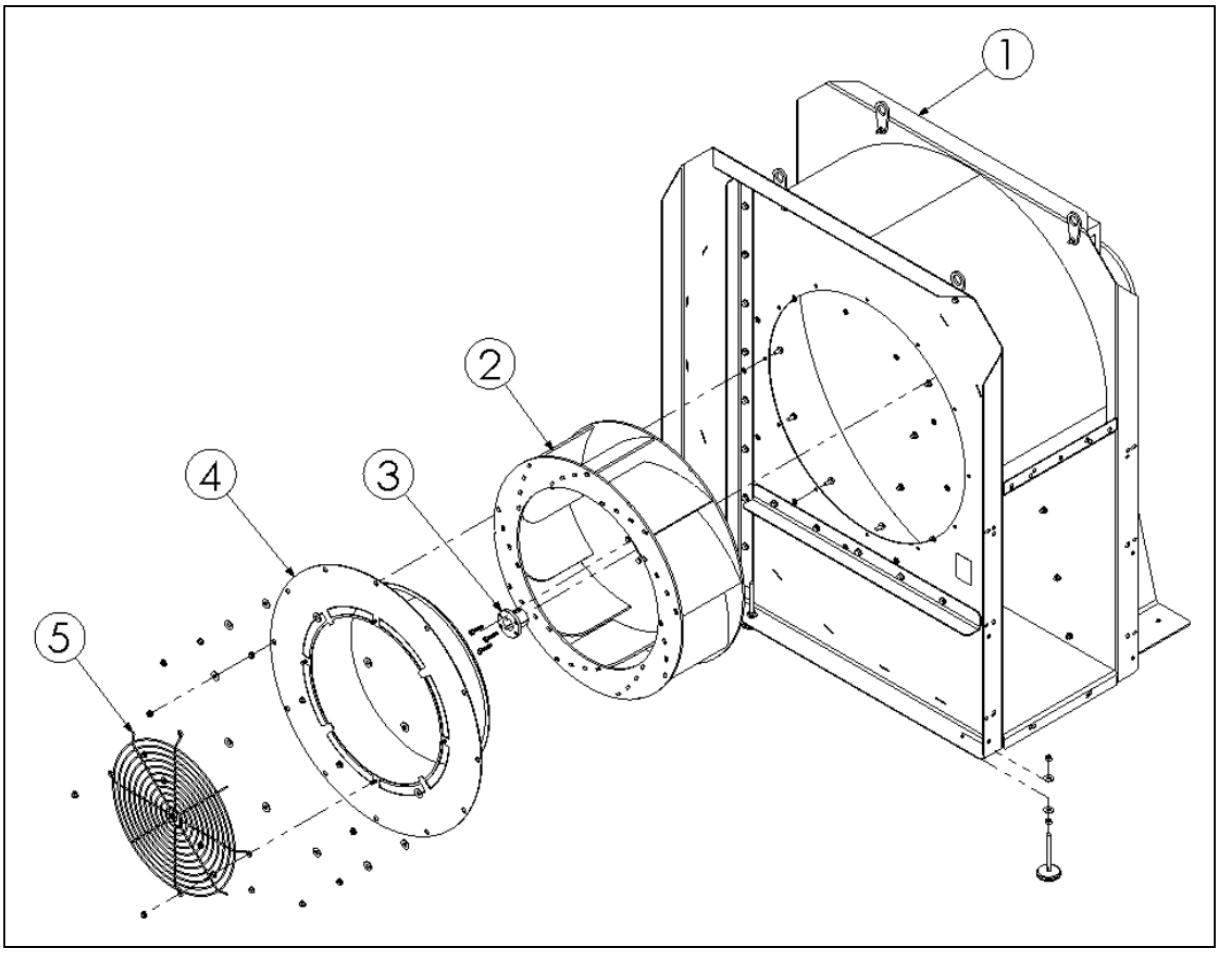

11.4 Dual HEPAD Parts

Item #	Description	Part #
1	Main Burner Box Ext Double Coil	
2	Single Axle Trailer Double	
3	Fan and Motor Combo	As required
4	Burner Cover	N/A
5	Fan Mounting Plate	N/A
6	Burner Unit 220,000BTU	UAX 220BTU
7	Heat Exchanger Tubes Left	
8	Heat Exchanger Tubes Right	

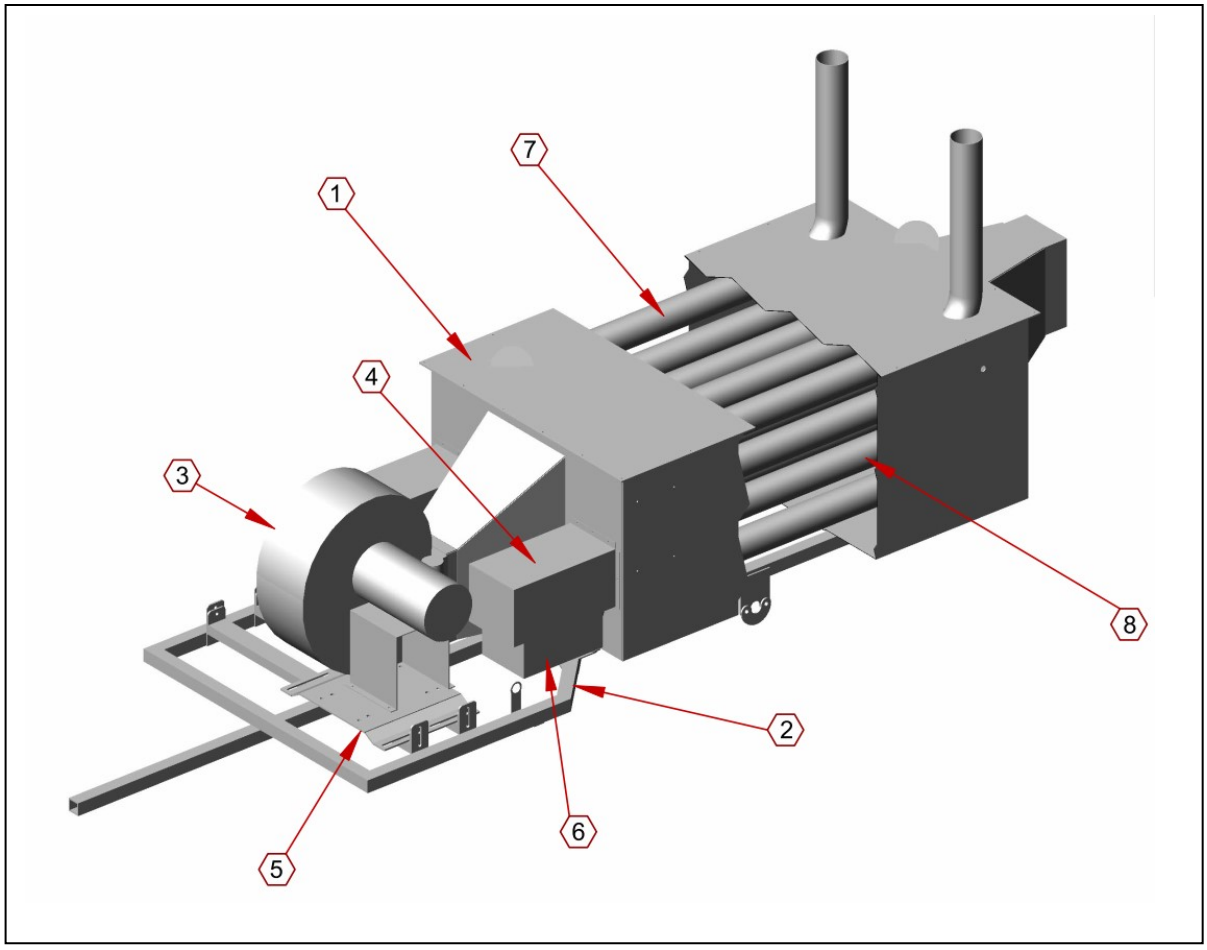

Chapter 12: Notes